Pressed bends 2 and 3mm.

Revised: 16.06.2020

Diameter for 2 mm: ø100 - ø400 mm.
Diameter for 3 mm: ø150 - ø200 mm.

Pressed bends are made of 2 and 3 mm sheet metal (s).

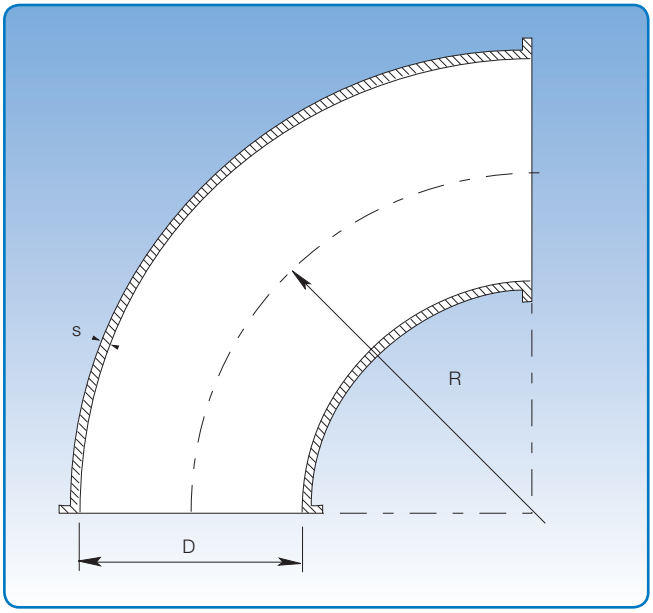

Dimensional specifications are given in the table below.
R = 1.5 x D for all dimensions.

Dimensions

D	s	90°		60°		45°		30°		15°	
mm	mm	Item no.	kg	Item no.	kg	Item no.	kg	Item no.	kg	Item no.	kg
100	2,00	1141292	1,20	1141262	0,90	1141242	0,60	1141232	0,40	1141212	0,20
120	2,00	1142292	1,80	1142262	1,20	1142242	0,90	1142232	0,60	1142212	0,30
125	2,00	1143292	2,00	1143262	1,30	1143242	1,00	1143232	0,70	1143212	0,40
150	2,00	1145292	2,90	1145262	2,00	1145242	1,40	1145232	1,00	1145212	0,50
160	2,00	1146292	3,20	1146262	2,20	1146242	1,60	1146232	1,10	1146212	0,70
180	2,00	1147292	3,80	1147262	2,70	1147242	1,90	1147232	1,40	1147212	0,70
200	2,00	1148292	5,00	1148262	3,40	1148242	2,50	1148232	1,70	1148212	0,70
250	2,00	1150292	8,90	1150262	5,90	1150242	4,40	1150232	2,90	1150212	1,40
300	2,00	1151292	12,90	1151262	7,60	1151242	6,40	1151232	4,30	1151212	1,90
350	2,00	1153292	17,80	1153262	12,00	1153242	9,30	1153232	5,20	1153212	3,20
400	2,00	1154292	23,50	1154262	15,70	1154242	11,80	1154232	7,50	1154212	4,10
150	3,00	1145392	4,30	1145362	3,00	1145342	2,20	1145332	1,50	1145312	0,80
160	3,00	1146392	4,80	1146362	3,20	1146342	2,40	1146332	1,60	1146312	1,00
180	3,00	1147392	6,20	1147362	4,10	1147342	3,10	1147332	2,10	1147312	1,10
200	3,00	1148392	7,50	1148362	5,10	1148342	3,70	1148332	2,50	1148312	1,30

The item numbers stated are for primed pressed bends assembled using pull rings [f.b].

Pressed bends are also available for other assembly methods on request.